Transfer Line Calculation Package

P504 – Los Alomos
June 10, 2019

Overview

The transfer line is used to transfer liquid helium from the liquefier dewars to the to the target dewar. It is required to deliver 135L to the target dewar. To achieve this 200L will be transferred from the liquefier dewar in 60 minutes.

Contents

Transfer line drawings

The transfer line is entirely vacuum jacketed, and is composed of stingers, flexible sections, valves, and rigid sections. The drawings show the layout and dimensions of the transfer line.

Transfer line losses calculation

Some of the liquid helium that enters the transfer line is lost in the form of helium gas. As a result, the amount of liquid helium that is delivered is reduced. This report estimates the amount of liquid helium that is delivered by calculating the amount of helium that boils-off as a result of: (i) flash boil-off, (ii) cooling down the transfer line, and (iii) heat leak through the transfer line.

Transfer line pressure drop calculation

Helium flowing through the transfer line will result in a pressure drop across the transfer line. This will limit the flow rate of helium. This calculation is used to verify that the size of the transfer line is appropriate to accommodate the required flow of helium.

Transfer line safety

The transfer line contains a cryogenic liquid, as a result, special consideration is required to ensure its safety. The safety calculations include: (i) the sizing of the relief valve, and (ii) the required wall thickness for the helium line.

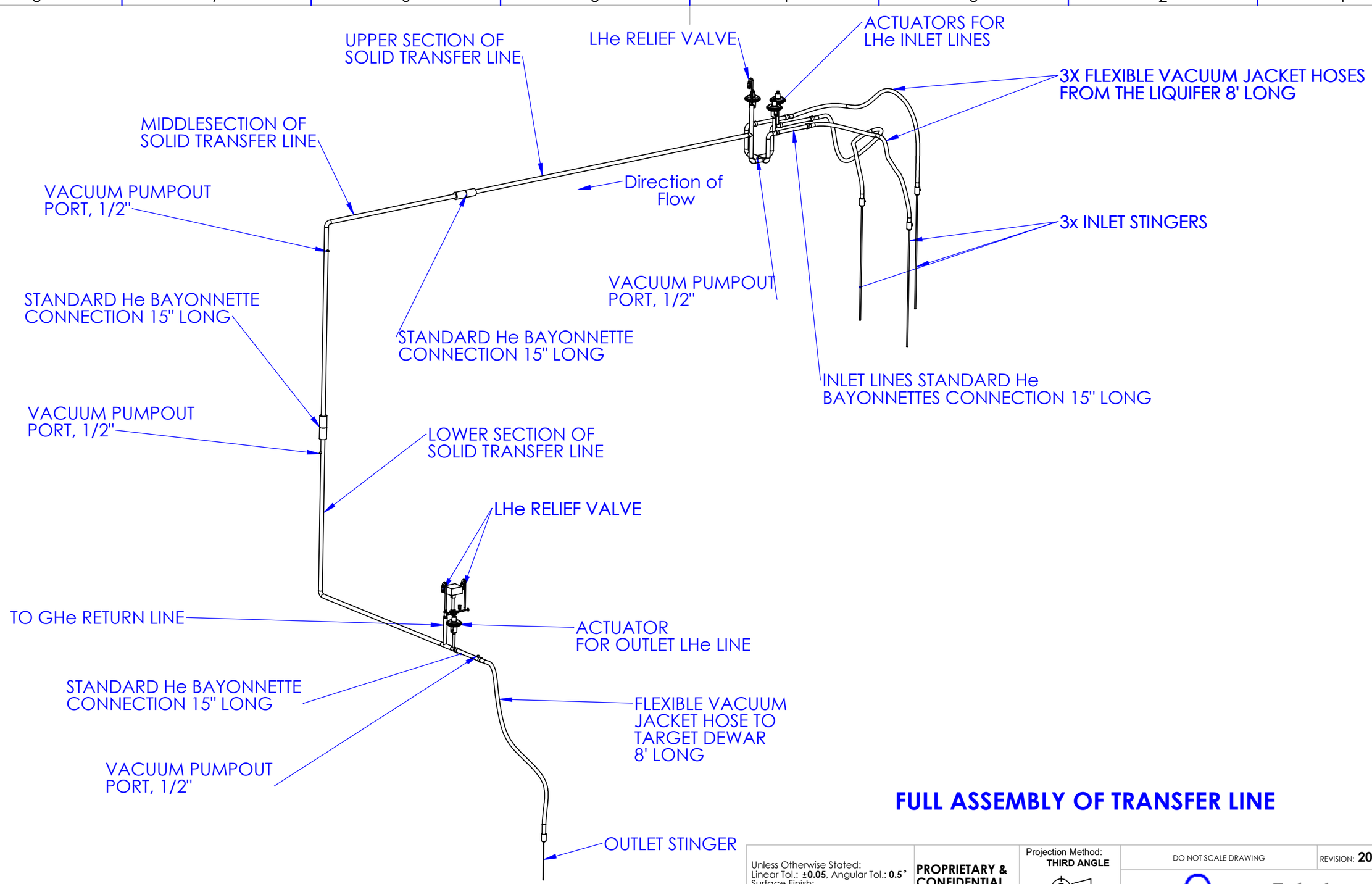

FULL ASSEMBLY OF TRANSFER LINE

Unless Otherwise Stated:
Linear Tol.: **±0.05**, Angular Tol.: **0.5°**
Surface Finish:
All Dimensions: INCH

PROPRIETARY & CONFIDENTIAL

Projection Method: **THIRD ANGLE**

DO NOT SCALE DRAWING

REVISION: **2019-06-10**

Quantum Technology

	NAME	SIGNATURE	DATE
DRAWN	R SMITH		2019-06-10
CHK'D			
APPV'D			

NOTES:

TITLE:

P504 - TRANSFER LINE SOLID

MATERIAL: N/A

FINISH: N/A

WEIGHT: N/A

DWG NO. P504-TL-021

Sheet Size: **A3**

SCALE: 1:40

SHEET 1 OF 6

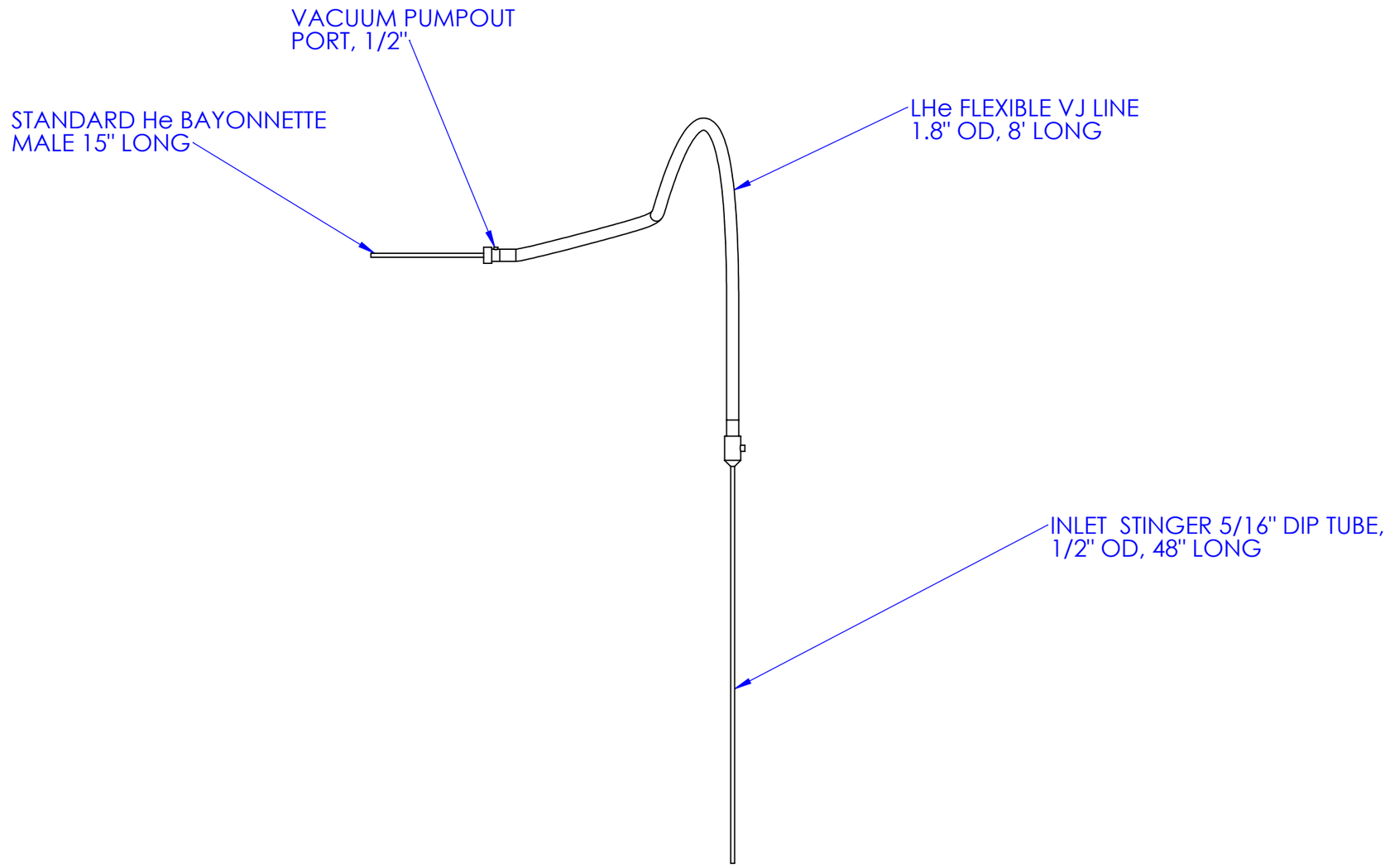

FLEXIBLE SECTION OF THE INLET OF THE TRANSFER LINE QTY: 3

Unless Otherwise Stated:
Linear Tol.: ±**0.2**, Angular Tol.: **0.5°**
Surface Finish:
All Dimensions: INCH

PROPRIETARY & CONFIDENTIAL

Projection Method: **THIRD ANGLE**

DO NOT SCALE DRAWING

REVISION: **2019-06-10**

Quantum Technology

	NAME	SIGNATURE	DATE
DRAWN	R SMITH		2019-06-10
CHK'D			
APPV'D			

NOTES:

TITLE:

P504 - TRANSFER LINE DIMENSIONS

MATERIAL: N/A

FINISH: N/A

WEIGHT: N/A

DWG NO. P504-TL-022

Sheet Size: **A3**

SCALE: 1:16

SHEET 2 OF 6

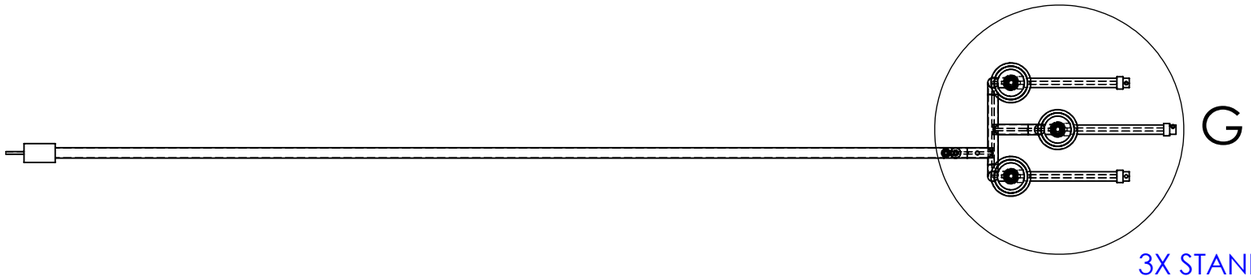

TOP VIEW

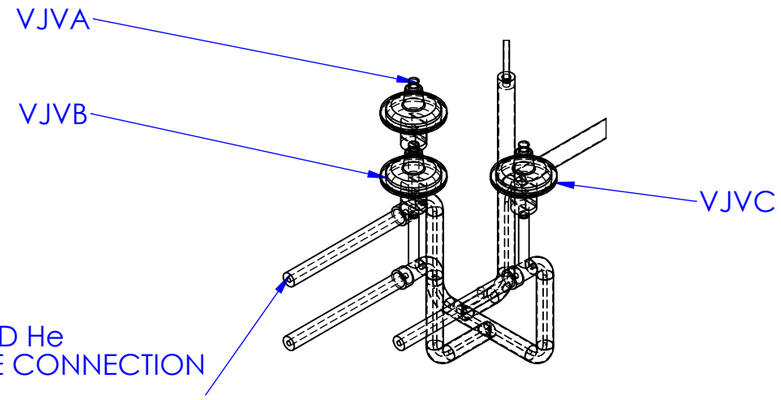

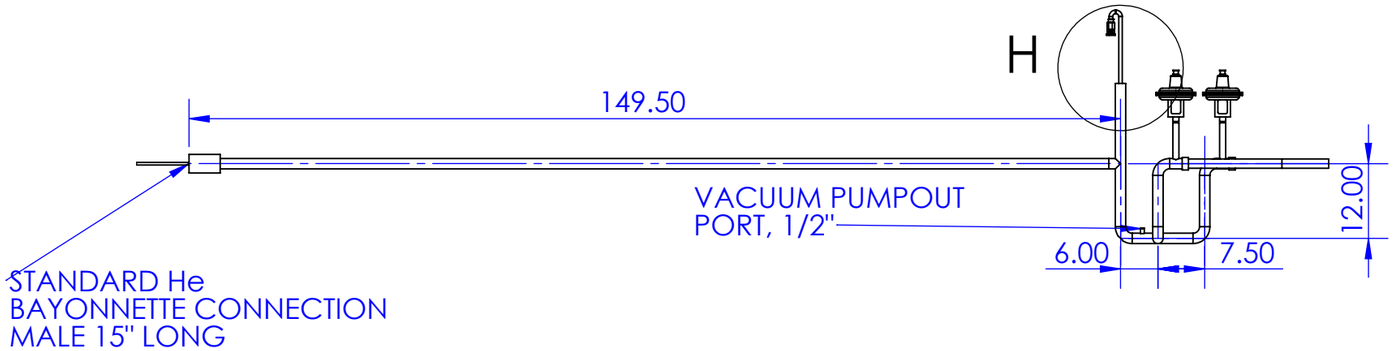

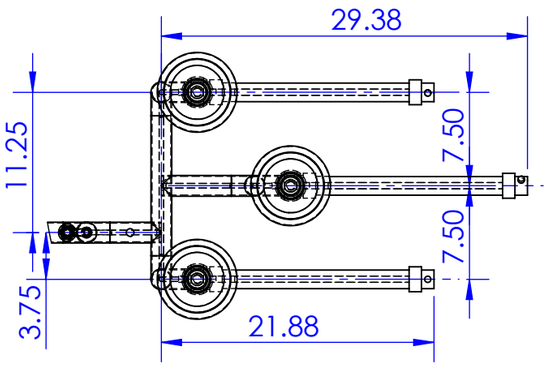

DETAIL G

SCALE 2 : 25

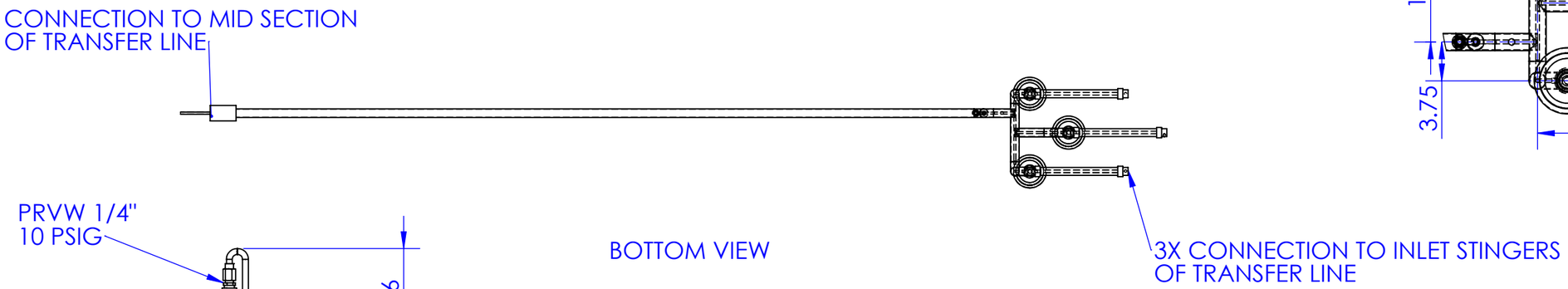

BOTTOM VIEW

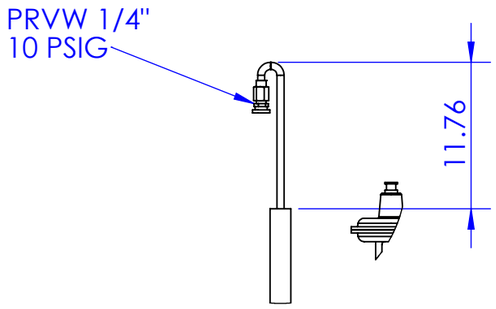

DETAIL H

SCALE 2 : 25

UPPER SECTION OF TRANSFER LINE QTY: 1

Unless Otherwise Stated:
Linear Tol.: ±**0.05**, Angular Tol.: **0.5°**
Surface Finish:
All Dimensions: INCH

PROPRIETARY & CONFIDENTIAL

Projection Method: **THIRD ANGLE**

DO NOT SCALE DRAWING

REVISION: **2019-06-10**

Quantum Technology

	NAME	SIGNATURE	DATE
DRAWN	R SMITH		2019-06-10
CHK'D			
APPV'D			

NOTES:

TITLE:

P504 - TRANSFER LINE DIMENSIONS

MATERIAL: N/A

FINISH: N/A

WEIGHT: N/A

DWG NO. P504-TL-023

Sheet Size: **A3**

SCALE: 1:25

SHEET 3 OF 6

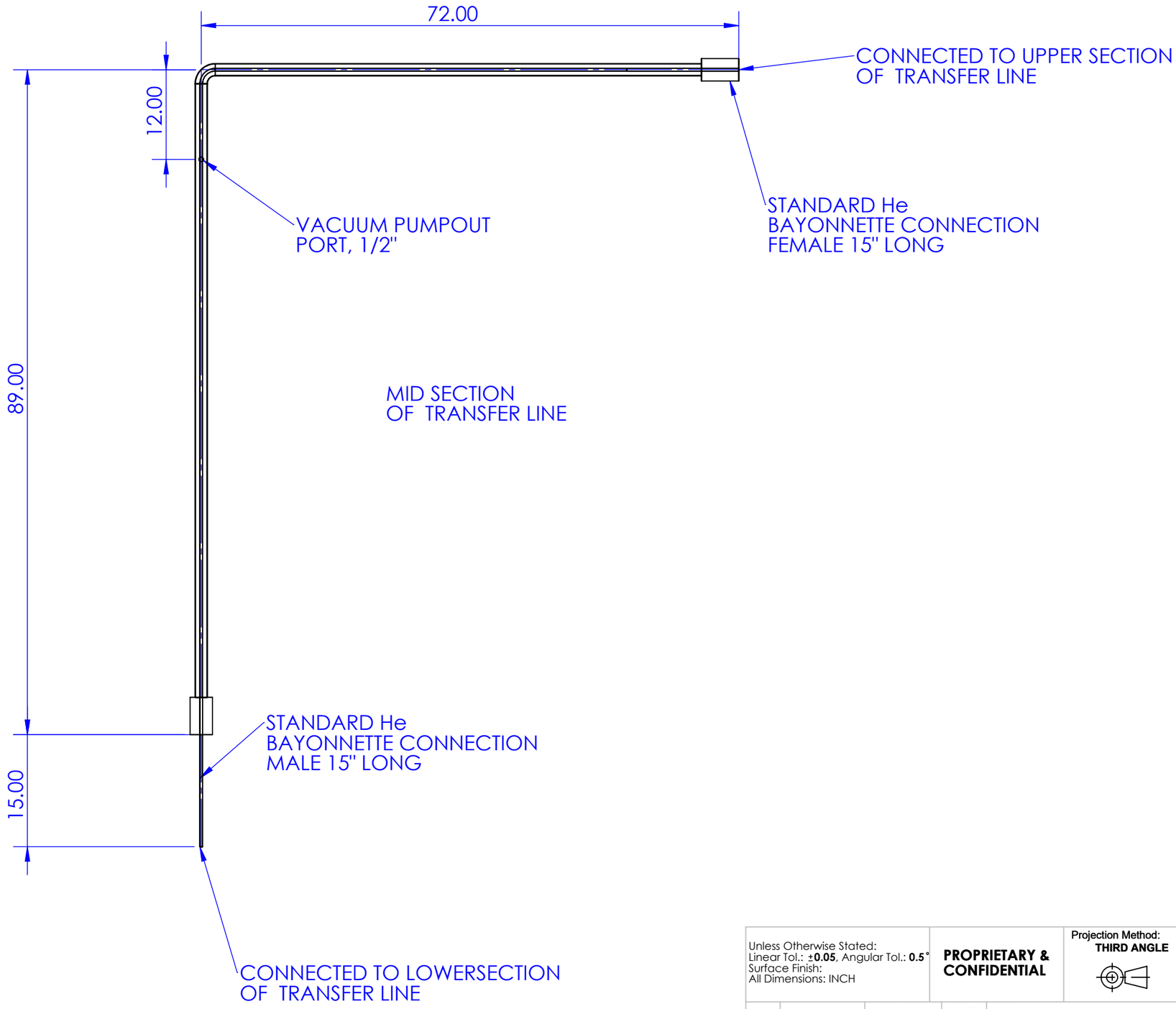

MID SECTION OF TRANSFER LINE QTY: 1

Unless Otherwise Stated:
Linear Tol.: ±**0.05**, Angular Tol.: **0.5°**
Surface Finish:
All Dimensions: INCH

PROPRIETARY & CONFIDENTIAL

Projection Method: **THIRD ANGLE**

DO NOT SCALE DRAWING

REVISION: **2019-06-10**

Quantum Technology

	NAME	SIGNATURE	DATE
DRAWN	R SMITH		2019-06-10
CHK'D			
APPV'D			

NOTES:

TITLE:

P504 - TRANSFER LINE DIMENSIONS

MATERIAL: N/A

FINISH: N/A

WEIGHT: N/A

DWG NO. P504-TL-024

Sheet Size: **A3**

SCALE: 1:15

SHEET 4 OF 6

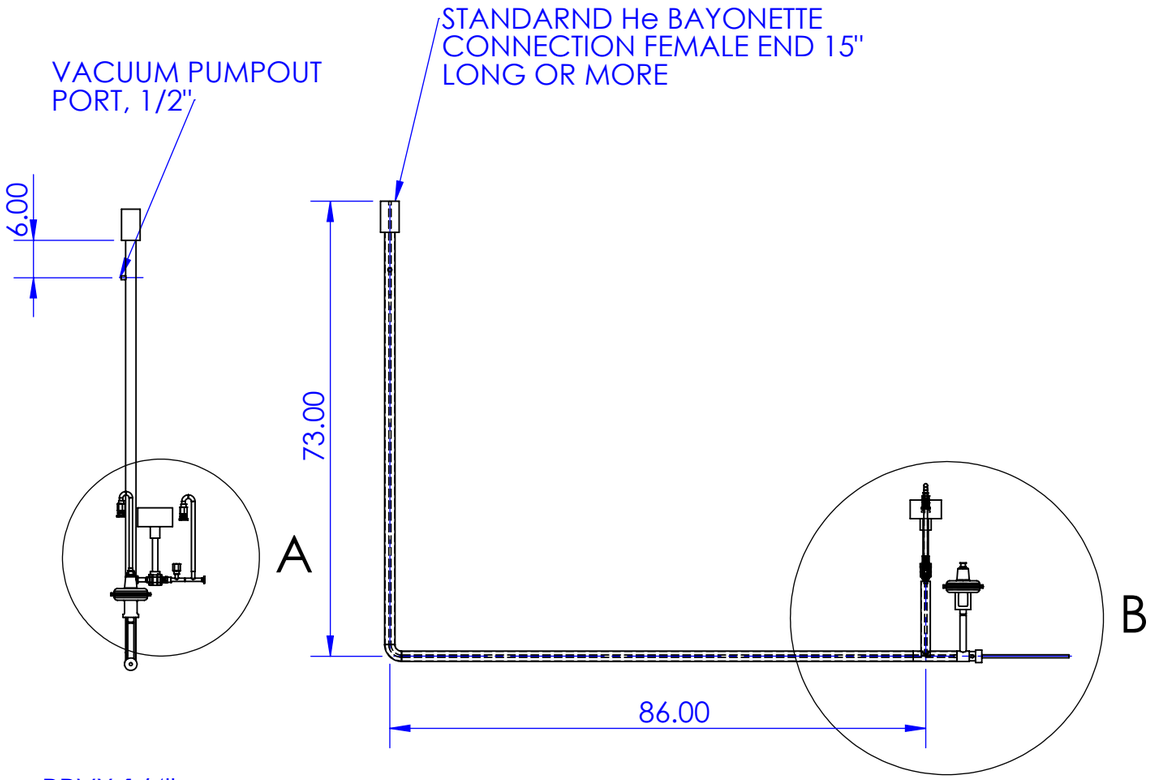

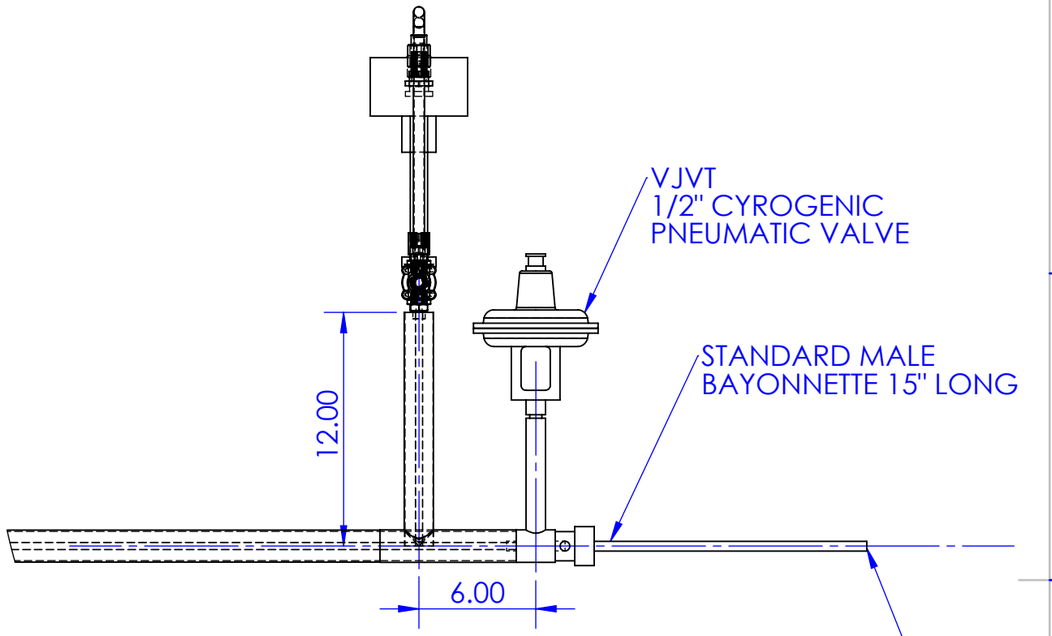

DETAIL B

SCALE 1 : 8

CONNECT TO LHe FLEXIBLE
LINE TO MAGNET DEWAR
(OUTLET OF TRANSFER LINE)

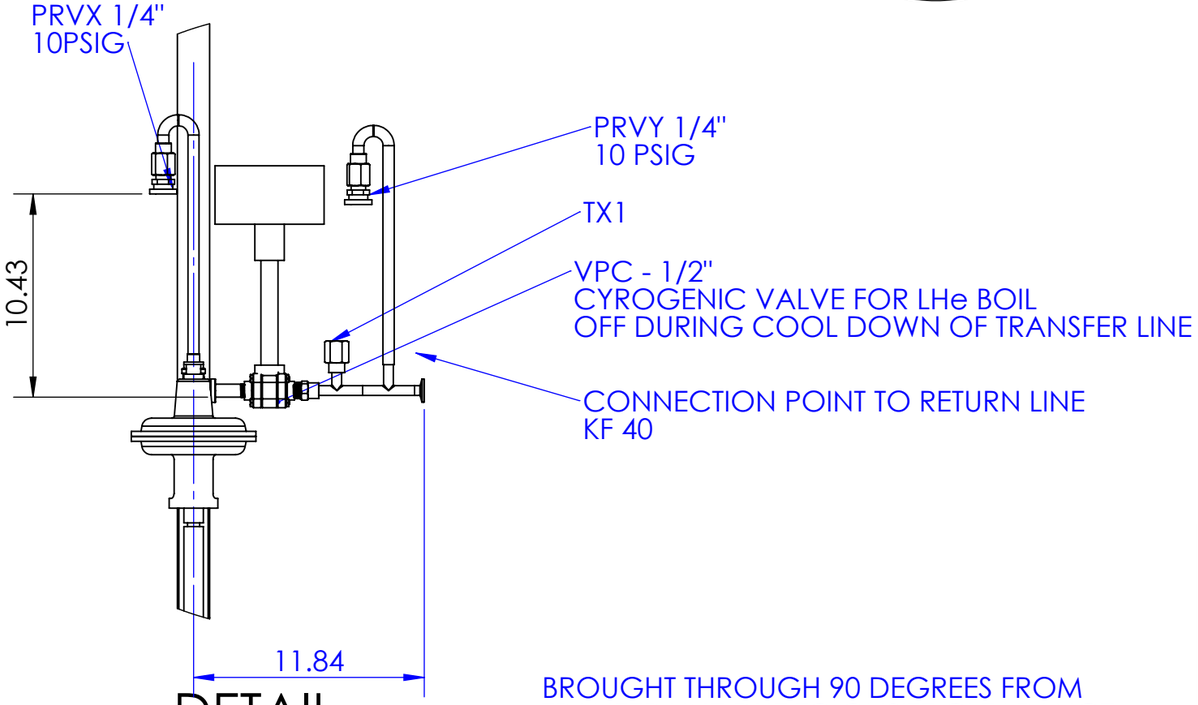

DETAIL A

SCALE 1 : 8

BROUGHT THROUGH 90 DEGREES FROM
TRANFER LINE DUE TO ONSITE CLEARANCE
THREADED CONNECTION TO LINE - NO CHANGE
IN DESIGN

LOWER SECTION OF TANSFER LINE QTY: 1

Unless Otherwise Stated:
Linear Tol.: ±**0.05**, Angular Tol.: **0.5°**
Surface Finish:
All Dimensions: INCH

PROPRIETARY & CONFIDENTIAL

Projection Method: **THIRD ANGLE**

DO NOT SCALE DRAWING

REVISION: **2019-06-10**

Quantum Technology

	NAME	SIGNATURE	DATE
DRAWN	R SMITH		2019-06-10
CHK'D			
APPV'D			

NOTES:

TITLE:

P504 - TRANSFER LINE DIMENSIONS

MATERIAL: N/A

FINISH: N/A

WEIGHT: N/A

DWG NO. P504-TL-025

Sheet Size: **A3**

SCALE: 1:25

SHEET 5 OF 6

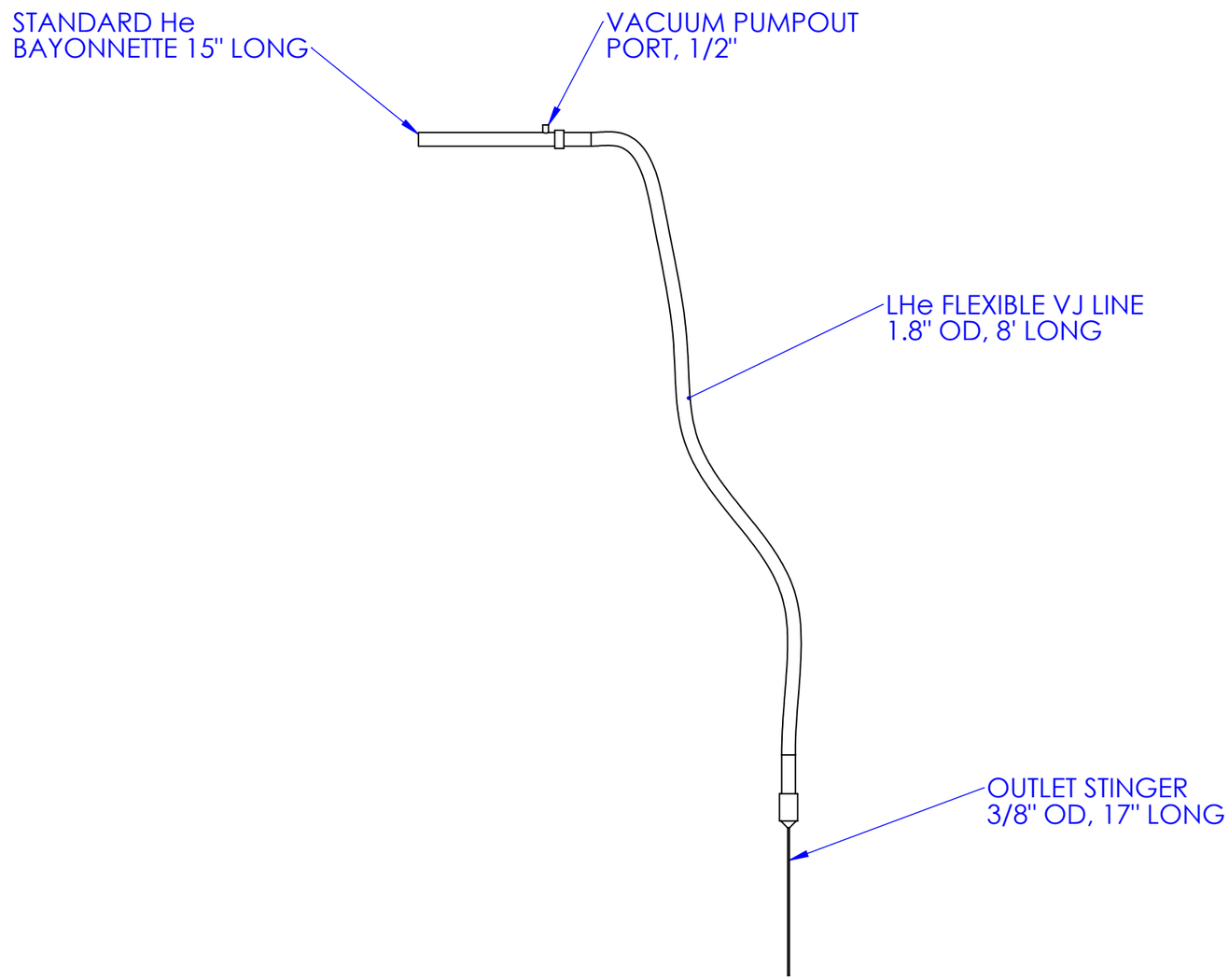

FLEXIBLE SECTION FOR OUTLET OF THE TRANSFER LINE QTY: 1

Unless Otherwise Stated:
Linear Tol.: **±0.2**, Angular Tol.: **0.5°**
Surface Finish:
All Dimensions: INCH

PROPRIETARY & CONFIDENTIAL

Projection Method: **THIRD ANGLE**

DO NOT SCALE DRAWING

REVISION: **2019-06-10**

Quantum Technology

	NAME	SIGNATURE	DATE
DRAWN	R SMITH		2019-06-10
CHK'D			
APPV'D			

NOTES:

TITLE:

P504 - TRANSFER LINE DIMENSIONS

MATERIAL: N/A

FINISH: N/A

WEIGHT: N/A

DWG NO. P504-TL-026

Sheet Size: **A3**

SCALE: 1:16

SHEET 6 OF 6

Transfer line losses

P504 - Los Alamos
Jan 29, 2019
Stefan S-G

The liquid helium transfer line is designed to transfer 200L Lhe (before losses) in 60 min

This report estimates the amount of liquid deliverd by calculating the amount of helium that boils-off as a result of:
-flash boil-off
-cool down of the rigid line, flexible lines, bayonets and valves
-heat leak through the rigid line, flexible lines, bayonets and valves

Transfer properties

Transfer volume $V := 200\ \mathrm{L}$

Transfer duration $t := 60\ \mathrm{min}$

Liquid density $\rho_{liquid} := 124.3\ \frac{\mathrm{kg}}{\mathrm{m}^3}$

Flash boil-off

As the helium is tansfered, it moves from higher pressure to lower pressure. This result in some of the helium boiling off. A pressure drop of 6psi with no subcooling of the helium is considered to be conservative.

Enthalpy of saturated liquid at 23 psia $H_{liquid1} := 3.33 \frac{kJ}{kg}$

Enthalpy of saturated liquid at 17 psia $H_{liquid2} := 0.901 \frac{kJ}{kg}$

Enthalpy of saturated vapor at 17 psia $H_{vapor2} := 20.66 \frac{kJ}{kg}$

Percetage boil-off $x := \frac{H_{liquid1} - H_{liquid2}}{H_{vapor2} - H_{liquid2}} = 0.1229$

Boil-off volume $\boxed{V_{flash} := x \cdot V = 24.5863\ L}$

Cool Down Losses

Before the transfer the transfer line is at 300K. The transfer line is cooled by flowing liquid helium into the transfer line. This calculation assumes that the helium temperature at the outlet is 50K. The assumption is not valid for the final cooling of the transfer line, however, the heat required for this is relatively small.

Material properties

Density 304 SS $\rho_{ss} := 7900 \frac{kg}{m^3}$

Integrated heat capacity (4K to 300K for ss 304) (trc.nist.gov/cryogenics/materials) $C_{ss} := 92.2 \frac{kJ}{kg}$

Helium Gas Enthalpy at 50K $H_{vapor3} := 265 \frac{kJ}{kg}$

Helium heat $\Delta H_{He} := H_{vapor3} - H_{liquid2} = 264.099 \frac{kJ}{kg}$

Rigid Line Cool Down

Length of rigid line $L_{rigid} := 38.5\ ft$

Tubing OD $OD := 0.375\ in$

Tubing wall thickness $t_{wall} := 0.02\ in$

Tubing ID $ID := OD - 2 \cdot t_{wall} = 0.335\ in$

Cross section area $A := \frac{\pi}{4} \cdot \left(OD^2 - \left(OD - 2 \cdot t_{wall} \right)^2 \right) = 1.439 \cdot 10^{-5}\ m^2$

Mass of tubing $M_{tubing} := L_{rigid} \cdot A \cdot \rho_{ss} = 1.3341\ kg$

Boil-off $V_{rigid} := \frac{M_{tubing} \cdot C_{ss}}{\Delta H_{He} \cdot \rho_{liquid}} = 3.7469\ L$

Valve Cool Down

Number of valves $N_{valve} := 4$

Mass of valves $M_{valve} := 0.18\ lb$

Boil-off $V_{valve} := \frac{N_{valve} \cdot M_{valve} \cdot C_{ss}}{\Delta H_{He} \cdot \rho_{liquid}} = 0.9173\ L$

Flexible Line Cool Down

Inner Flexible Line Mass per length $m_{flex} := 0.04 \frac{lb}{ft}$

Length flexible Line $L_{flex} := 16\ ft$

Mass of inner flexible line $M_{flex} := m_{flex} \cdot L_{flex} = 0.2903\ kg$

Boil-off $V_{flex} := \frac{M_{flex} \cdot C_{ss}}{\Delta H_{He} \cdot \rho_{liquid}} = 0.8153\ L$

Bayonet Cool Down

Number of bayonets $N_{bayonet} := 4$

Mass of bayonet $M_{bayonet} := 0.8\ \mathrm{lb}$

Boil-off $V_{bayonet} := \frac{N_{bayonet} \cdot M_{bayonet} \cdot C_{ss}}{\Delta H_{He} \cdot \rho_{liquid}} = 4.0767\ \mathrm{L}$

Transfer Line Cooling

Total Boil-off $\boxed{V_{cooling} := V_{rigid} + V_{valve} + V_{flex} + V_{bayonet} = 9.5562\ \mathrm{L}}$

Transfer Losses

During the transfer additional helium is lost as a result of heat leak

Helium Latent Heat $L_{He} := H_{vapor2} - H_{liquid2} = 19.759\ \frac{\mathrm{kJ}}{\mathrm{kg}}$

Rigid line

Rigid line heat leak $Q_{rigid} := 0.6\ \frac{\mathrm{BTU}}{\mathrm{hr\ ft}} \cdot L_{rigid} = 6.7699\ \mathrm{W}$

Flexible line

Flexible line heat leak $Q_{flex} := 0.71\ \frac{\mathrm{BTU}}{\mathrm{hr\ ft}} \cdot L_{flex} = 3.3293\ \mathrm{W}$

Bayonet

Bayonet heat leak $Q_{bayonet} := N_{bayonet} \cdot 4.3\ \frac{\mathrm{BTU}}{\mathrm{hr}} = 5.0408\ \mathrm{W}$

Valve

Valve Heat leak $Q_{valve} := N_{valve} \cdot 3.1\ \frac{\mathrm{BTU}}{\mathrm{hr}} = 3.6341\ \mathrm{W}$

Total Heat Leak $Q_{total} := Q_{rigid} + Q_{flex} + Q_{bayonet} + Q_{valve} = 18.7741\ \mathrm{W}$

Rate He Loss $\boxed{V_{rate} := \frac{Q_{total}}{L_{He} \cdot \rho_{liquid}} = 27.5186\ \frac{\mathrm{L}}{\mathrm{hr}}}$

Summary

Flash boil-off $V_{flash} = 24.5863\ \mathrm{L}$

Cool down losses $V_{cooling} = 9.5562\ \mathrm{L}$

Transfer losses $V_{rate} = 27.5186\ \frac{\mathrm{L}}{\mathrm{hr}}$

Total Helium Delivered $\boxed{V - V_{flash} - V_{cooling} - V_{rate} \cdot t = 138.3389\ \mathrm{L}}$

Transfer line pressure drop

P504 - Los Alamos
Jan 29, 2019
Stefan S-G

The liquid helium transfer line is designed to transfer 200L LHe (before losses)in 60 min

The transfer line consits of the following components:
-Inlet stinger: 48", 1/2" outer tube, 5/16" (0.02" wall) inner tube
-Inlet flex line: 8 ft, inner tube 3/8" flex
-Rigid transfer line: 38.5 ft, 3/8" (0.02" wall) inner tube
-Outlet flex line: 8 ft, inner tube 3/8" flex
-Outlet stinger: 18", 3/8" outer tube, 3/16" (0.016" wall)inner tube

The calculation for pressure drop in two phase helium flow is as described in Chang et al "Pressure drop of two-phase helium along long cryogenic flexible transfer lines...", 2016

A conservative approach is taken by assuming the flow consists of the highest gas fraction for the entire lenght of the transferline. See "Transfer Line Losses" for boiloff calculations. This calculation does not account for the inclination of the transfer line minnor losses at inlets, oulets, transitions, elbows, and valves.

Flow properties

Batch volume $V_{batch} := 200\ \mathrm{L}$

Cool down volume $V_{cooling} := 10\ \mathrm{L}$

Transfer volume $V_{transfer} := V_{batch} - V_{cooling}$

Amount of boil off $V_{boiloff} := 50\ \mathrm{L}$

Density $\rho_l := 124.3\ \frac{\mathrm{kg}}{\mathrm{m}^3}$ $\rho_g := 17.12\ \frac{\mathrm{kg}}{\mathrm{m}^3}$

Liquid volume $V_l := V_{transfer} - V_{boiloff} = 140\ \mathrm{L}$

Gas volume $V_g := V_{boiloff} \cdot \frac{\rho_l}{\rho_g} = 363.0257\ \mathrm{L}$

Gas Volume Fraction $x := \frac{V_{boiloff}}{V_{transfer}} = 0.2632$

Density $\rho := \frac{1}{\frac{x}{\rho_g} + \frac{(1-x)}{\rho_l}} = 46.9499\ \frac{\mathrm{kg}}{\mathrm{m}^3}$

Transfer duration $t := 60\ \mathrm{min}$

Volume flow rate $Q := \frac{V_l + V_g}{t} = 0.0001\ \frac{\mathrm{m}^3}{\mathrm{s}}$

Viscocity $\mu_l := 3.15\ 10^{-6}\ \mathrm{Pa\ s}$ $\mu_g := 1.26 \cdot 10^{-6}\ \mathrm{Pa\ s}$

Surface roughness of ss $\varepsilon := 0.002\ \mathrm{mm}$

Inlet Stinger

Tubing OD $OD := \frac{5}{16}\ \text{in}$

Tubing wall thickness $t_{wall} := 0.02\ \text{in}$

Length $L := 48\ \text{in}$

Tubing ID $ID := OD - 2 \cdot t_{wall} = 0.2725\ \text{in}$

Velocity $v := \frac{Q}{\frac{\pi}{4} \cdot ID^2} = 3.7136\ \frac{\text{m}}{\text{s}}$

Reynolds number $Re_g := \frac{ID \cdot v \cdot \rho_g}{\mu_g} = 3.4925 \cdot 10^5$ $Re_l := \frac{ID \cdot v \cdot \rho_l}{\mu_l} = 1.0143 \cdot 10^6$

$$Re := \frac{x^2 + (1-x)^2 \cdot \left(\frac{\rho_g}{\rho_l}\right)}{\frac{x^2}{Re_g} + \left(\frac{(1-x)^2}{Re_l}\right) \cdot \frac{\rho_g}{\rho_l}} = 5.2949 \cdot 10^5$$

Friction factor

$$f := \left(\frac{1}{(-2) \cdot \log10\left(\frac{1}{3.7065} \cdot \frac{\varepsilon}{ID} - \frac{5.0452}{Re} \cdot \log10\left(\frac{1}{2.8257} \cdot \left(\frac{\varepsilon}{ID}\right)^{1.1098} + \frac{5.8506}{Re^{0.8981}}\right)\right)}\right)^2 = 0.0162$$

Pressure drop $\Delta P_{IS} := \frac{1}{2} \cdot f \cdot \rho \cdot v^2 \cdot \frac{L}{ID} = 0.1337\ \frac{\text{lbf}}{\text{in}^2}$

Inlet Flex

Tubing OD $OD := 0.375\ \text{in}$

Tubing wall thickness $t_{wall} := 0.02\ \text{in}$

Length $L := 8\ \text{ft}$

Tubing ID $ID := OD - 2 \cdot t_{wall} = 0.335\ \text{in}$

Velocity $v := \dfrac{Q}{\frac{\pi}{4} \cdot ID^2} = 2.4572\ \dfrac{\text{m}}{\text{s}}$

Reynolds number $Re_g := \dfrac{ID \cdot v \cdot \rho_g}{\mu_g} = 2.8409 \cdot 10^5$ $Re_l := \dfrac{ID \cdot v \cdot \rho_l}{\mu_l} = 8.2505 \cdot 10^5$

$$Re := \frac{x^2 + (1-x)^2 \cdot \left(\frac{\rho_g}{\rho_l}\right)}{\frac{x^2}{Re_g} + \left(\frac{(1-x)^2}{Re_l}\right) \cdot \frac{\rho_g}{\rho_l}} = 4.3071 \cdot 10^5$$

Friction factor corrugated pipe $f := 0.08$

Pressure drop $\Delta P_{IF} := \frac{1}{2} \cdot f \cdot \rho \cdot v^2 \cdot \frac{L}{ID} = 0.4713\ \dfrac{\text{lbf}}{\text{in}^2}$

Rigid

Tubing OD $OD := 0.375\ \text{in}$

Tubing wall thickness $t_{wall} := 0.02\ \text{in}$

Length $L := 38.5\ \text{ft}$

Tubing ID $ID := OD - 2 \cdot t_{wall} = 0.335\ \text{in}$

Velocity $v := \dfrac{Q}{\frac{\pi}{4} \cdot ID^2} = 2.4572\ \dfrac{\text{m}}{\text{s}}$

Reynolds number $Re_g := \dfrac{ID \cdot v \cdot \rho_g}{\mu_g} = 2.8409 \cdot 10^5$ $\quad Re_l := \dfrac{ID \cdot v \cdot \rho_l}{\mu_l} = 8.2505 \cdot 10^5$

$$Re := \frac{x^2 + (1-x)^2 \cdot \left(\frac{\rho_g}{\rho_l}\right)}{\frac{x^2}{Re_g} + \left(\frac{(1-x)^2}{Re_l}\right) \cdot \frac{\rho_g}{\rho_l}} = 4.3071 \cdot 10^5$$

Friction factor

$$f := \left(\frac{1}{(-2) \cdot \log10\left(\frac{1}{3.7065} \cdot \frac{\varepsilon}{ID} - \frac{5.0452}{Re} \cdot \log10\left(\frac{1}{2.8257} \cdot \left(\frac{\varepsilon}{ID}\right)^{1.1098} + \frac{5.8506}{Re^{0.8981}}\right)\right)}\right)^2 = 0.016$$

Pressure drop $\Delta P_R := \frac{1}{2} \cdot f \cdot \rho \cdot v^2 \cdot \frac{L}{ID} = 0.4533\ \dfrac{\text{lbf}}{\text{in}^2}$

Outlet Flex

Tubing OD $OD := 0.375\ \text{in}$

Tubing wall thickness $t_{wall} := 0.02\ \text{in}$

Length $L := 8\ \text{ft}$

Tubing ID $ID := OD - 2 \cdot t_{wall} = 0.335\ \text{in}$

Velocity $v := \dfrac{Q}{\frac{\pi}{4} \cdot ID^2} = 2.4572\ \dfrac{\text{m}}{\text{s}}$

Reynolds number $Re_g := \dfrac{ID \cdot v \cdot \rho_g}{\mu_g} = 2.8409 \cdot 10^5$ $Re_l := \dfrac{ID \cdot v \cdot \rho_l}{\mu_l} = 8.2505 \cdot 10^5$

$$Re := \frac{x^2 + (1-x)^2 \cdot \left(\frac{\rho_g}{\rho_l}\right)}{\frac{x^2}{Re_g} + \left(\frac{(1-x)^2}{Re_l}\right) \cdot \frac{\rho_g}{\rho_l}} = 4.3071 \cdot 10^5$$

Friction factor corrugated pipe $f := 0.08$

Pressure drop $\Delta P_{OF} := \frac{1}{2} \cdot f \cdot \rho \cdot v^2 \cdot \frac{L}{ID} = 0.4713\ \dfrac{\text{lbf}}{\text{in}^2}$

Outlet Stinger

Tubing OD $OD := \frac{3}{16}\ \text{in}$

Tubing wall thickness $t_{wall} := 0.016\ \text{in}$

Length $L := 18\ \text{in}$

Tubing ID $ID := OD - 2 \cdot t_{wall} = 0.1555\ \text{in}$

Velocity $v := \frac{Q}{\frac{\pi}{4} \cdot ID^2} = 11.4043\ \frac{\text{m}}{\text{s}}$

Reynolds number $Re_g := \frac{ID \cdot v \cdot \rho_g}{\mu_g} = 6.1202 \cdot 10^5$ $Re_l := \frac{ID \cdot v \cdot \rho_l}{\mu_l} = 1.7774 \cdot 10^6$

$$Re := \frac{x^2 + (1-x)^2 \cdot \left(\frac{\rho_g}{\rho_l}\right)}{\frac{x^2}{Re_g} + \left(\frac{(1-x)^2}{Re_l}\right) \cdot \frac{\rho_g}{\rho_l}} = 9.2789 \cdot 10^5$$

Friction factor

$$f := \left(\frac{1}{(-2) \cdot \log10\left(\frac{1}{3.7065} \cdot \frac{\varepsilon}{ID} - \frac{5.0452}{Re} \cdot \log10\left(\frac{1}{2.8257} \cdot \left(\frac{\varepsilon}{ID}\right)^{1.1098} + \frac{5.8506}{Re^{0.8981}}\right)\right)}\right)^2 = 0.0173$$

Pressure drop $\Delta P_{OS} := \frac{1}{2} \cdot f \cdot \rho \cdot v^2 \cdot \frac{L}{ID} = 0.8872\ \frac{\text{lbf}}{\text{in}^2}$

Total

$$\Delta P := \Delta P_{IS} + \Delta P_{IF} + \Delta P_R + \Delta P_{OF} + \Delta P_{OS} = 2.4168\ \frac{\text{lbf}}{\text{in}^2}$$

Transfer line safety

P504 - Los Alamos
June 5, 2019
Stefan S-G, QTC

Relief valve sizing

The rigid section of the transfer line is located between two valves. If these valves are shut they can trap liquid helium in the transfer line. The transfer line is equiped with two pressure relief valves (one on either end) to vent the resulting boil-off. The rate of boil-off is determined by the heat load. A loss in insulating vacuum will result in the largest heat load and therefore, the largest rate of boil-off. This report considers a loss of insulating vacuum in each of the sections of the transfer line independently.

Helium tube OD $OD := \frac{3}{8}\,\text{in} = 0.0095\,\text{m}$

Atmospheric pressure $P_{atm} := 14.7\,\text{psi}$

Relief valve pressure (Generant CRV-4-FS-10) $P_{relief} := 10\,\text{psi}$

Helium latent heat at 24.7 psia $\Delta H := (19.5 - 4.08)\,\frac{\text{kJ}}{\text{kg}} = 15.42\,\frac{\text{kJ}}{\text{kg}}$

Density of saturated helium gas at 24.7 psia $\rho_{gas} := 30.7\,\frac{\text{kg}}{\text{m}^3}$

Viscosity $\mu := 1.26 \cdot 10^{-6}\,\text{Pa s}$

Heat flux (for LHe cryostat with 10mm MLI W. Lehmann & G. Zahn safety aspects for LHe cryostats IPC Science & Technology (1978) 569-579) $q := 5000\,\frac{\text{W}}{\text{m}^2}$

Upper section

Length $L_{upper} := 150\,\text{in}$

Tube surface area $A_{upper} := \pi \cdot OD \cdot L_{upper} = 0.114\,\text{m}^2$

Heat transfer $Q_{upper} := q \cdot A_{upper} = 570.0459\,\text{W}$

Mass rate of boil off $W_{upper} := \frac{Q_{upper}}{\Delta H} = 0.037\,\frac{\text{kg}}{\text{s}}$

Middle section

Length $L_{middle} := 161\,\text{in}$

Tube surface area $A_{middle} := \pi \cdot OD \cdot L_{middle} = 0.1224\,\text{m}^2$

Heat transfer $Q_{middle} := q \cdot A_{middle} = 611.8493\,\text{W}$

Mass rate of boil off $W_{middle} := \frac{Q_{middle}}{\Delta H} = 0.0397\,\frac{\text{kg}}{\text{s}}$

Lower section

Length $L_{lower} := 159\,\text{in}$

Tube surface area $A_{lower} := \pi \cdot OD \cdot L_{lower} = 0.1208\,\text{m}^2$

Heat transfer $Q_{lower} := q \cdot A_{lower} = 604.2487\,\text{W}$

Mass rate of boil off $W_{lower} := \frac{Q_{lower}}{\Delta H} = 0.0392\,\frac{\text{kg}}{\text{s}}$

A loss in insulating vacuum of the middle section of the transferline produces the largest mass boil-off. This mass boil off is therefore used to determine the required relief valve size.

The required relief valve area is calculated from
"Sizing Pressure-Relief Devices - American Institute of Chemical Engineers"
(https://www.aiche.org/sites/default/files/cep/20131068_r.pdf)

Compressibility factor	$Z := 1$
Temperature	$T := 4.8\ \mathrm{K}$
Heat capacity ratio	$\gamma := 1.66$
Gas contant	$R_g := 8.314\ \frac{\mathrm{J}}{\mathrm{K\ mol}}$
Factor for simplification	$C := \sqrt{\frac{\gamma}{R_g} \cdot \left(\frac{2}{\gamma+1}\right)^{(\gamma+1)\cdot(\gamma-1)}}$
Discharge coefficient (Generant CRV-4-FS-10)	$K_d := 0.44$
Relieving pressure (absolute, 10% back pressure)	$P_1 := P_{atm} + 1.1 \cdot P_{relief} = 1.772 \cdot 10^5\ \mathrm{Pa}$
Backpressure adjustment factor	$K_b := 1$
molecular weight	$M := 4.02\ \frac{\mathrm{g}}{\mathrm{mol}}$
require area	$A_{relief} := \frac{W_{middle}}{C \cdot K_d \cdot P_1 \cdot K_b} \cdot \sqrt{\frac{T \cdot Z}{M}} = 5.0551 \cdot 10^{-5}\ \mathrm{m}^2$
required area per relief valve	$A_{rv} := \frac{A_{relief}}{2}$
Required diameter	$\boxed{d := \sqrt{\frac{4 \cdot A_{rv}}{\pi}} = 0.2233\ \mathrm{in}}$
Relief valve orifice (Generant CRV-4-FS-10)	$\boxed{d_{orifice} := 0.312\ \mathrm{in}}$

Required tube wall thickness

The required wall thickness for the helium line is determined based on the maximum pressure that could potentially be seen by the helium line.

The maximum pressure in the transfer line would result from a loss of vacuum insulation. In this case the liquid helium in the transfer line would boil-off rapidly. The helium gas would travel through the helium line to the relief valve. The helium line would resist the flow of helium and result in a build of pressure.

The middle section of the transfer line is furthest from the relief valves so a loss of vacuum in this section results in the largest pressure. In this case the boil-off is releaved equally through each relief valve. The calculations below determines the maximum pressure that would result due to half of boil-off being releaved through the lower relief valve. This will equal the maximum pressure in the system by the symmetry.

Mass rate of boil off $m_{boiloff} := \frac{W_{middle}}{2} = 0.0198 \frac{kg}{s}$

Volume rate of boil off $V_{boiloff} := \frac{m_{boiloff}}{\rho_{gas}} = 1.3693 \frac{ft^3}{min}$

wall thickness $t_{wall} := 0.02\ in$

Internal diamter $ID := OD - 2 \cdot t_{wall} = 0.0085\ m$

Velosity in tube $v := \frac{V_{boiloff}}{\frac{\pi}{4} \cdot ID^2} = 11.3644 \frac{m}{s}$

Reynolds number $Re := \frac{\rho_{gas} \cdot v \cdot ID}{\mu} = 2.3561 \cdot 10^6$

Surface roughness (typical value for ss) $\varepsilon := 0.002\ mm$

Friction factor $f := \left(-1.8 \cdot \log10\left(\frac{6.9}{Re} + \left(\frac{\frac{\varepsilon}{ID}}{3.7}\right)^{1.11}\right)\right)^{-2} = 0.0146$

Pressure drop in tube $P_{tube} := \frac{1}{2} \cdot \rho_{gas} \cdot v^2 \cdot \frac{L_{lower}}{ID} \cdot f = 1.9868\ psi$

Maximum pressure in helium line $\boxed{P_{max} := P_{relief} \cdot 1.1 + P_{tube} = 12.9868\ psi}$

Requried wall thickness coeffiecient calculations as per ASME B31.1-2016

Allowable stress for ss 304 (Table A-1M) $\sigma_{allow} := 138\ MPa$

Pressure relative to vacuum space $P_{gauge} := P_{max} + P_{atm} = 27.6868\ psi$

Longitudinal weld joint quality factor for seamless tube (Table A-1B) $E := 1$

Wall thickness coefficient (Table 304.1.1) $Y := 0.4$

Weld joint strength reducion factor (Table 302.3.5) $W := 1$

Required wall thickness (equation 3a)

$$\boxed{t := \frac{P_{gauge} \cdot OD}{2 \cdot \left(\sigma_{allow} \cdot E \cdot W + P_{gauge} \cdot Y\right)} = 0.0003\ in}$$

Actual minimum wall thickness

$$\boxed{t_{min} := t_{wall} \cdot 0.875 = 0.0175\ in}$$